SMD Clock Oscillator

Ceramic Case SMD DXO-75, DXO-33

Feature & Applications:

- Precise SEAM weld ceramic package
- Ultra thin
- HCMOS/TTL output
- 3.3V or 5.0V supply voltage
- PDA, Internet

■ Outline Drawing

Dimension (Unit=mm)

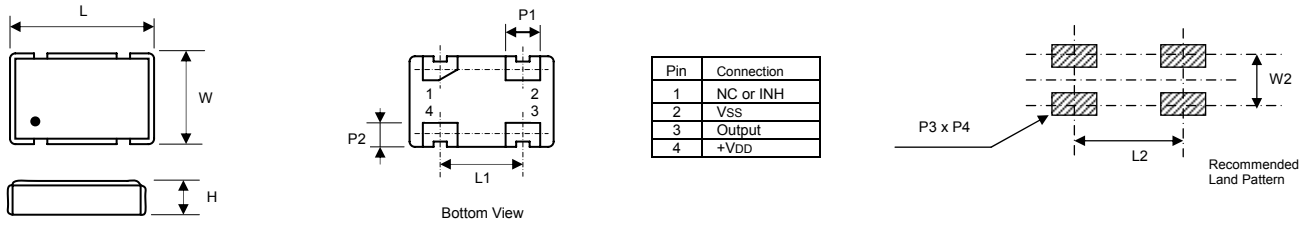

Pin	Connection
1	NC or INH
2	VSS
3	Output
4	+VDD

Type	L	W	H	L1	P1	P2	L2	W2	P3	P4
DXO-75	7.0 ±0.15	5.0 ±0.15	1.4 ±0.2	5.08±0.15	1.4±0.1	1.2±0.1	6.4±0.15	2.54±0.15	2.2±0.1	1.4±0.1
DXO-33	5.0 ±0.15	3.2 ±0.15	1.2±0.2	2.54±0.15	1.2±0.1	1.0±0.1	2.54±0.15	2.2±0.15	1.4±0.1	1.2±0.1

DXO-75 DXO-33

■ Output Waveform

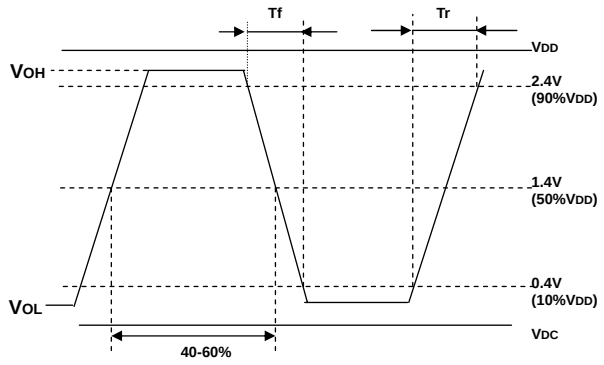

■ Test Circuit

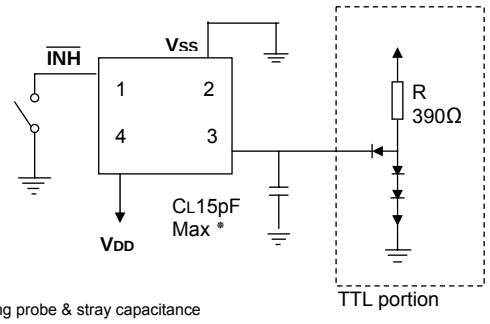

■ General Characteristics

Parameter / Case	DXO-75	DXO-33
Frequency Range	1.0 MHz to 180.000 MHz	
Frequency Tolerance	± 25 ppm, ± 50 ppm, ± 100 ppm	
Operating Temperature	0°C to +70°C or custom	
Storage Temperature	-40°C to +85°C	
Supply Voltage	+3.3V or +5.0V ±10%, others available	
Supply Current	25mA max (1.5 to 23.999MHz) 40mA max (24 to 49.999MHz) 50mA max (50 to 80.000MHz)	
Symmetry (Duty Cycle)	40% to 60 % (standard), 45% to 55% (tight) at 1/2VDD	
Output '0' Level (VOL)	+0.4VDC max (TTL), 10% VDD max(HCMOS)	
Output '1' Level (VOH)	+2.4VDC min. (TTL), 90% VDD min(HCMOS)	
Rise/Fall Time (10%↔90% VDD)	10nS max	
Start up Time	10mS max	
Output Load	15pF HCMOS or 10TTL	
Tri-state output *optional	Enable/High Impedance	

Part Number Guide:

DXO	-	75	-	2	-	24.576	-	100	-	S	-	5.0	-	N
SMD		**Case**		**Output**		**Frequency**		**Freq. Tol**		**Symmetry**		**Input Voltage**		**Options**
Clock Oscillator				HCMOS		24.576MHz		100 = ±100ppm		S = 40~60% T = 45~55%		5.0 = +5.0V 3.3 = +3.3V		N = No TS = Tri-state

Other combination is available